Sunuprise Technology Ltd.

1/2.5 Base Dual port surface mout Transformer

Part Number:SHG48813MP

- Compliant with IEEE 802.3bz standard.
- 1A Current Capability Per POE Port/Two-pair
- RoHS compliant.
- Operating temperature range :- 40°C to +85°C.

Electrical Specifications @ 25°C

Part Number	Turns Ratio (±5%)		Insertion Loss (dB Max)		HI-POT (Vrms)
	TX	RX	1-100MHz	100-125MHz	
SHG48813MP	1CT:1CT	1CT:1CT	1.0	1.5	1500

Continue

Part Number	Return Loss (dB Min)		Cross Talk (dB Min)		DCMR (dB Min)	
	1-40 MHz	40-125 MHz	1 -60MHz	60-100MHz	1-30 MHz	100-125 MHz
SHG48813MP	-16	-16+10*log(f/40)	-37	-25	-40	-28

Schematics: **Mechanicals:**

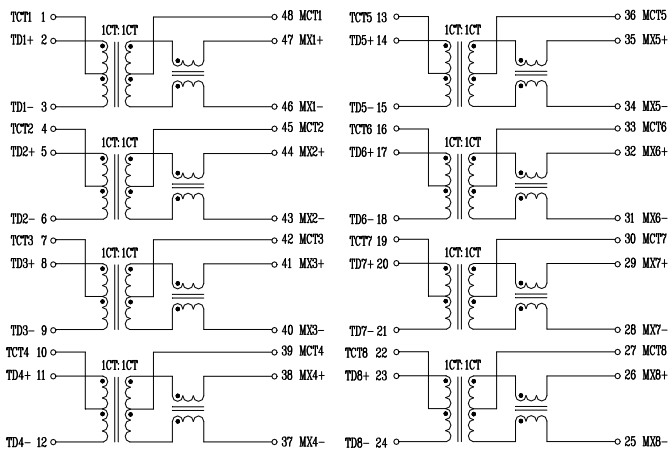

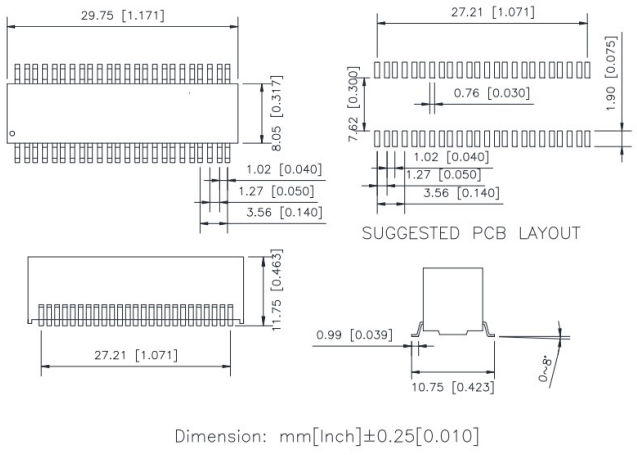

Tel：+86-816-8386139/0-18508164900 E-mail：Johnhubei@163.com